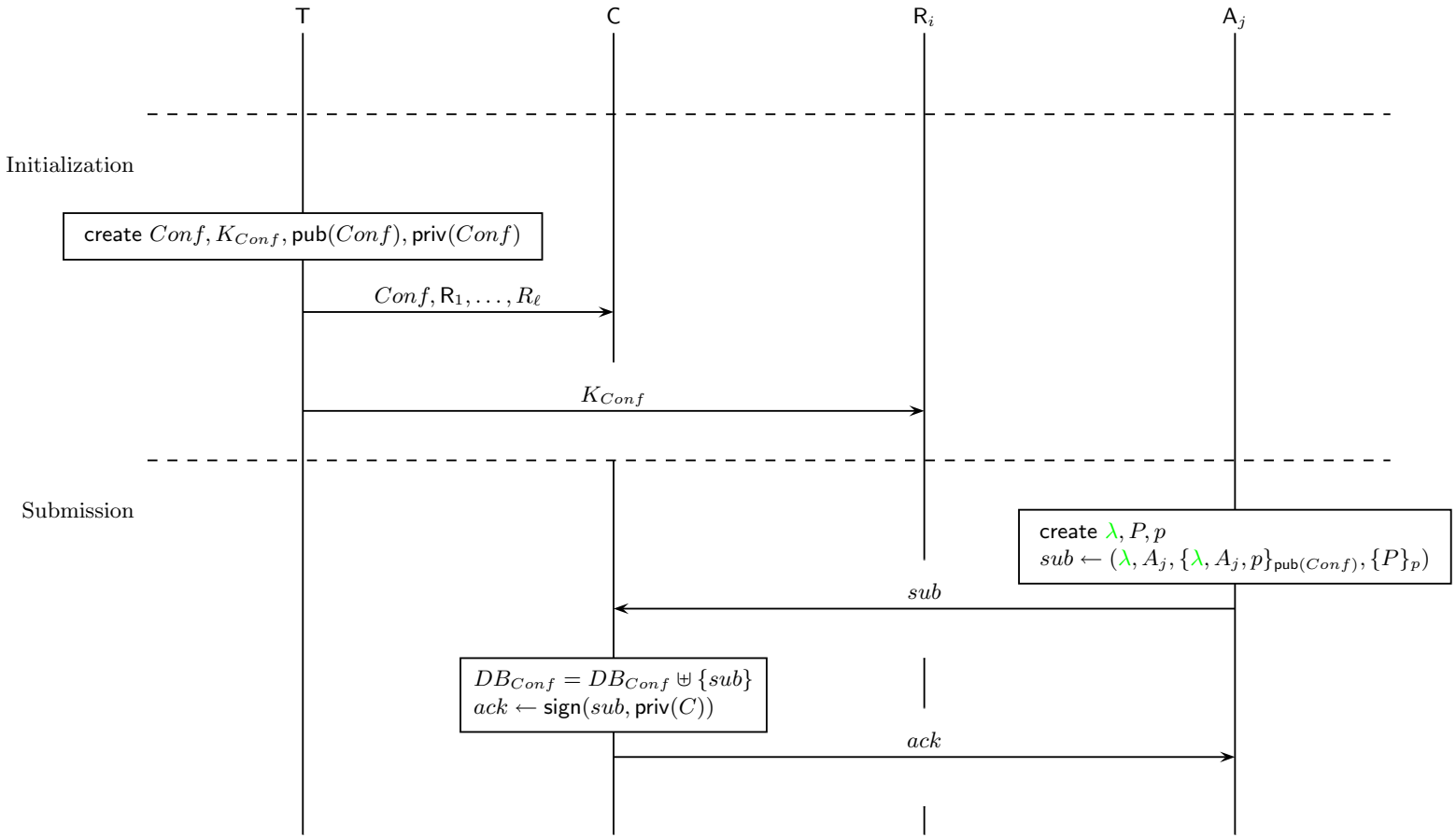
T
C
R_i
A_j
Initialization
create $Conf, K_{Conf}, \mathsf{pub}(Conf), \mathsf{priv}(Conf)$
$Conf, \mathsf{R}_1, \ldots, R_\ell$
K_{Conf}
Submission
create λ, P, p
$sub \leftarrow (\lambda, A_j, \{\lambda, A_j, p\}_{\mathsf{pub}(Conf)}, \{P\}_p)$
sub
$DB_{Conf} = DB_{Conf} \uplus \{sub\}$
$ack \leftarrow \mathsf{sign}(sub, \mathsf{priv}(C))$
ack

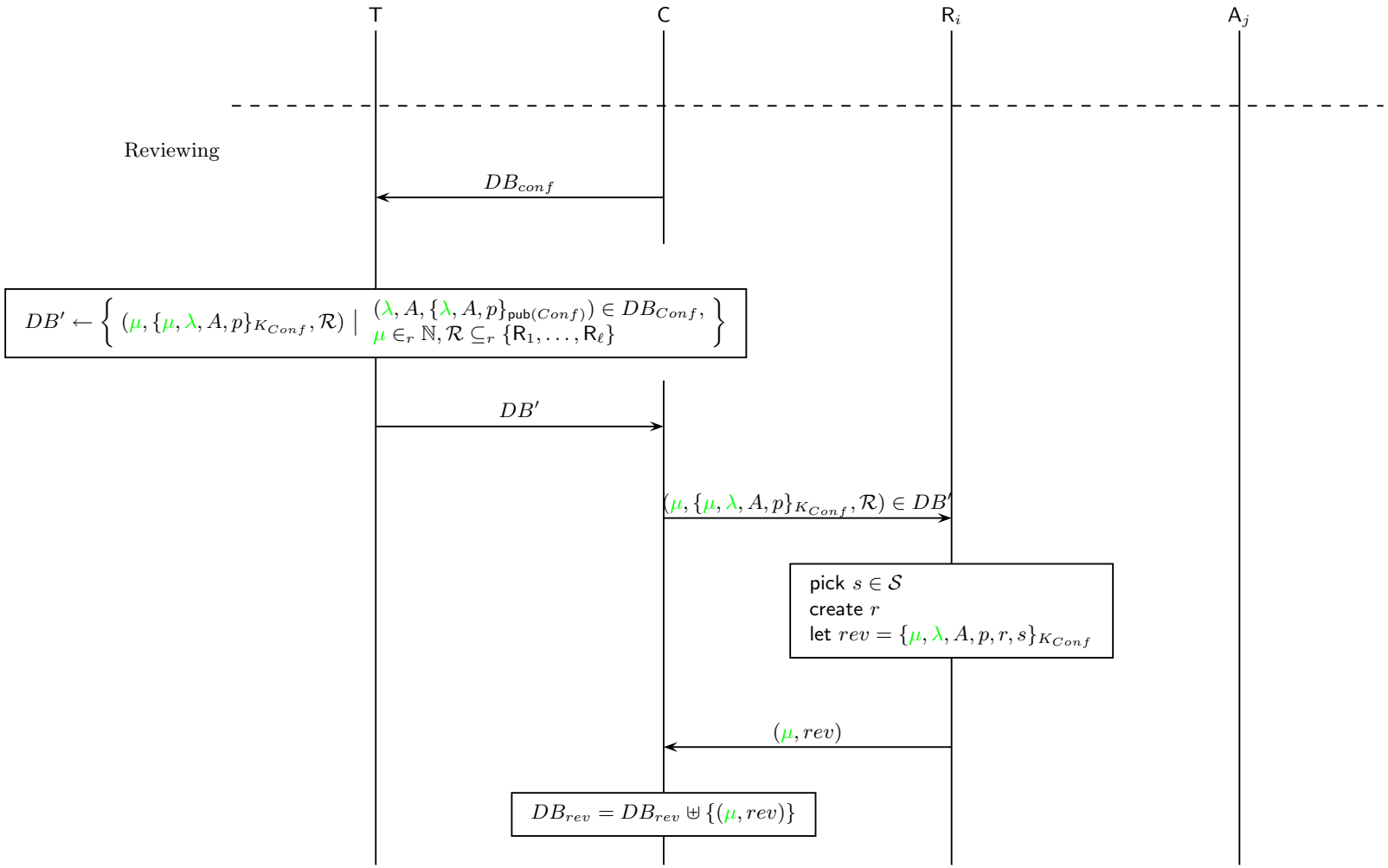
T
C
R_i
A_j
Reviewing
DB_{conf}
$DB' \leftarrow \left\{ (\mu, \{\mu, \lambda, A, p\}_{K_{Conf}}, \mathcal{R}) \mid \begin{array}{l} (\lambda, A, \{\lambda, A, p\}_{\mathsf{pub}(Conf)}) \in DB_{Conf}, \\ \mu \in_r \mathbb{N}, \mathcal{R} \subseteq_r \{\mathsf{R}_1, \ldots, \mathsf{R}_\ell\} \end{array} \right\}$
DB'
$(\mu, \{\mu, \lambda, A, p\}_{K_{Conf}}, \mathcal{R}) \in DB'$
pick $s \in \mathcal{S}$
create r
let $rev = \{\mu, \lambda, A, p, r, s\}_{K_{Conf}}$
(μ, rev)
$DB_{rev} = DB_{rev} \uplus \{(\mu, rev)\}$

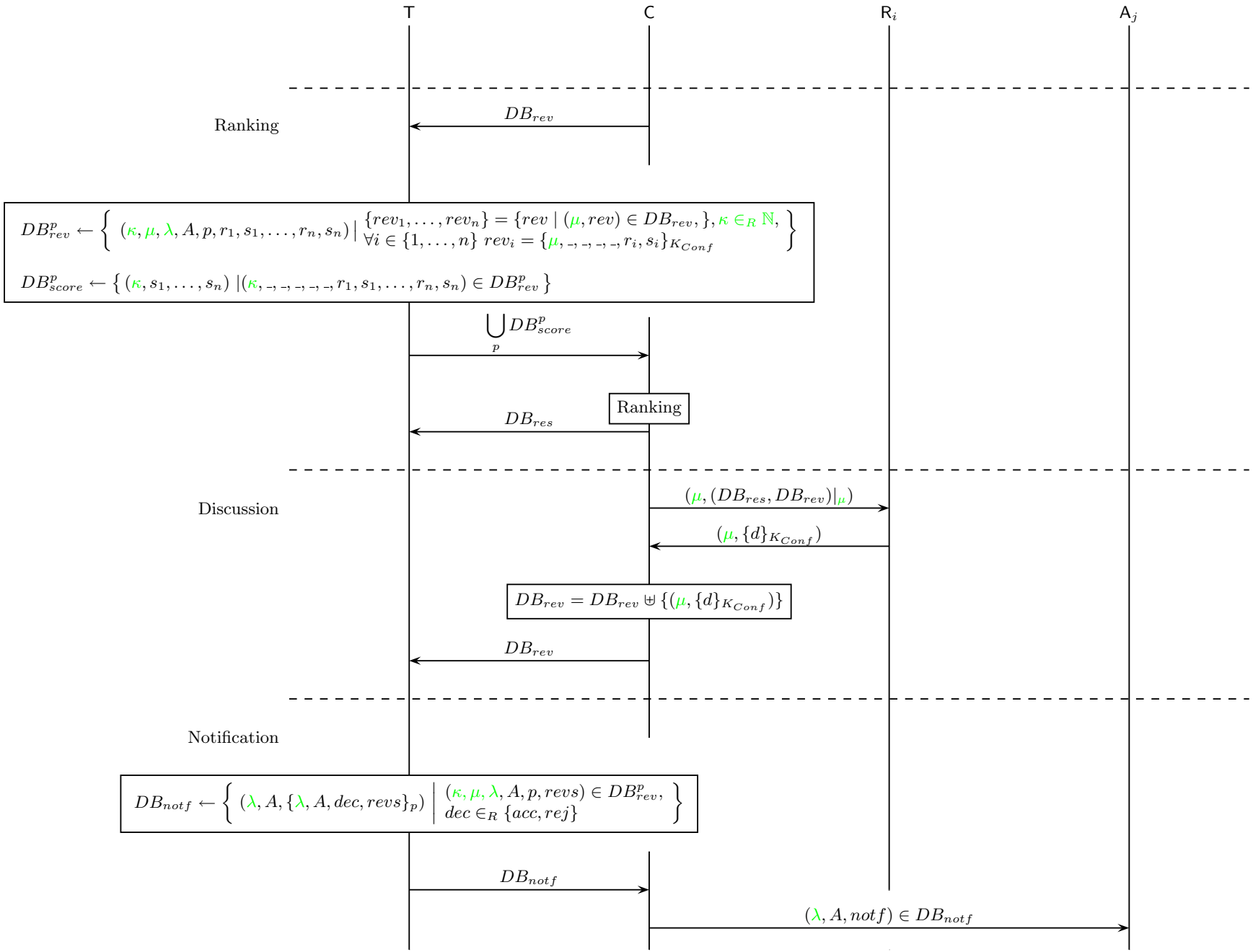
T
C
R_i
A_j
Ranking
DB_{rev}
$DB^p_{rev} \leftarrow \left\{ (\kappa, \mu, \lambda, A, p, r_1, s_1, \ldots, r_n, s_n) \,\middle|\, \begin{array}{l} \{rev_1, \ldots, rev_n\} = \{rev \mid (\mu, rev) \in DB_{rev}, \}, \kappa \in_R \mathbb{N}, \\ \forall i \in \{1, \ldots, n\}\ rev_i = \{\mu, _, _, _, _, r_i, s_i\}_{K_{Conf}} \end{array} \right\}$
$DB^p_{score} \leftarrow \{ (\kappa, s_1, \ldots, s_n) \mid (\kappa, _, _, _, _, _, r_1, s_1, \ldots, r_n, s_n) \in DB^p_{rev} \}$
$\bigcup_p DB^p_{score}$
Ranking
DB_{res}
Discussion
$(\mu, (DB_{res}, DB_{rev})|_\mu)$
$(\mu, \{d\}_{K_{Conf}})$
$DB_{rev} = DB_{rev} \uplus \{(\mu, \{d\}_{K_{Conf}})\}$
DB_{rev}
Notification
$DB_{notf} \leftarrow \left\{ (\lambda, A, \{\lambda, A, dec, revs\}_p) \,\middle|\, \begin{array}{l} (\kappa, \mu, \lambda, A, p, revs) \in DB^p_{rev}, \\ dec \in_R \{acc, rej\} \end{array} \right\}$
DB_{notf}
$(\lambda, A, notf) \in DB_{notf}$